bivaq®

design by
Andrés Bluth

club

The CLUB collection, designed by Andrés Bluth for BIVAQ, is a sober and elegant concept of straight lines and sharp angles composed of different options of chair, lounger and hammock. Its simplicity makes this collection perfect for different atmospheres and designs. A refreshing and ethereal concept that blends with both classic and avant-garde projects.

CLUB consists of an extruded aluminum structure finished with polyester paint. The seats and backrests are made of Vinytex fabric, providing freshness and lightness to the designs and available in different colors. The table tops are produced in aluminum and HPL compact in a wide variety of tones. CLUB is a versatile, functional and contemporary proposal, stackable and easy to collect, perfect for versatile spaces for different purposes throughout the day.

club single deckchair

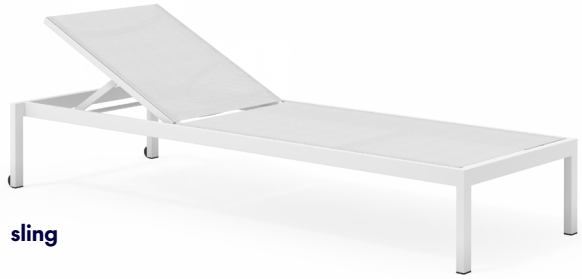

sling

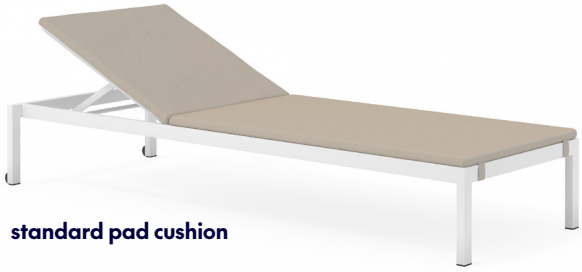

standard pad cushion

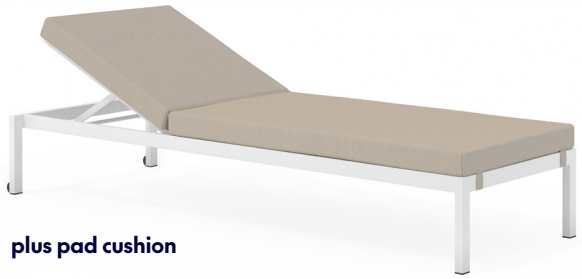

plus pad cushion

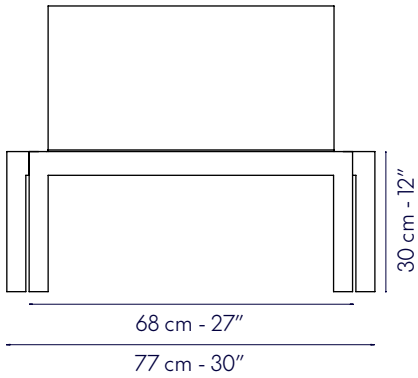

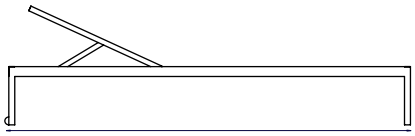

Frame
• Extruded aluminum finished with polyester powder coating.

Sling
• Vinytex fabric.
•Synthetic fabric made of plastic coated polyester. UV resistance (class. 7/8).

Cushions
• Removables.
• Available in 3 different versions: without pad cushion, with standard pad cushion (3,5 cm - 1,37" thick) and with plus pad cushion (8,5 cm - 3,34" thick).

Cushion filling
Seat and back cushion
• Composition 100% polieter fiber + polyester padding.
Standard pad cushion
• Foam density 40 kg/m3 polieter fiber
• 150 gr/m^2 polyester fiber
Plus pad cushion
• Foam density 28 kg/m3 polieter fiber
• 150 gr/m^2 polyester fiber

Acrylic fabric
• 100% solution dyed acrlic, UV resistance (class.7/8) with stain and water repellent finish.

Polyolefin fabric
• Made of polyolefin material, to obtain a soft texture and good touch.
• Resistant to dirt as it does not penetrate inside, and by its nature is inert, non-toxic and does not absorb odors.

Vinytex fabric
• Synthetic fabric made of plastic coated polyester. UV resistance (class. 7/8).

Weight and volume

Product	Kg/Lbs	m3/cft
Club deckchair (delivered 2 units in one box)	36/80	0,38/13,4

Other features

Available in 3 versions: without pad cushion, with standard pad cushion (1,37" thick) or with plus pad cushion (3,34" thick).
Available with or without wheels.
Seats and backrests made of vinytex fabric.
Available waterproof cover.
Suitable for outdoor use.
Resistant to weathering and sunlight.
See all the available colors/fabrics in our current Bivaq Catalog or website.

Maintenance

Powder coating aluminium

• Clean the surface regularly with warm water and neutral soap. Use a non-abrasive sponge or cloth.
• Rinse with plenty of water immediately after cleaning and remove the water on the surface witha drying cloth to help you avoid water stains.

Acrylic fabric

• For optimal cleaning, gently wipe the surface with a damp sponge or cloth using a neutral soap diluted in water.
• Should stubborn stains persist, employ a soft brush to gently agitate the affected area instead of a cloth.

Polyolefin fabric

• To avoid general soiling, frequent vacuuming or light brushing to remove dust is recommended.
• Clean the surface regularly with warm water and neutral soap. Use a non-abrasive sponge or cloth.
• The fabric can be washed at low temperature (-30°C -90°F) with warm water and mild soap.

Vinytex fabric

• It is recommended to clean it with a water humid sponge or cloth and a little bit of neutral soap, diluted in large quantity of water.
• If this doesn't work, use a soft brush instead of a cloth to rub the stain.
• Be careful and do not use hard chemicals products that can affect the fibers.