bivaq®

design by
Francesc Rifé Studio

nami

Immerse yourself in the serenity of the sea with our first outdoor furniture collection made of wood. Inspired by the concept of "nami" which means "wave" in Japanese, each piece in this collection has been designed to capture the emotion and fluidity of the sea. Using carefully selected iroko slats along with a lightweight painted aluminum frame, experience that sense of lightness and tranquility that only the ocean can offer. All the while, enjoy the comfort and timeless beauty of this Collection.

With a rational design approach and a keen sense of detail, Francesc Rifé Studio has created for Bivaq this new collection whose proposal includes 1, 2 and 3-seater sofa together with tables of two heights where different materials and colors can be combined. The cushions, with their relaxed lines, contrast and balance with the rigidity of the flat wooden surfaces.

nami, low table double height

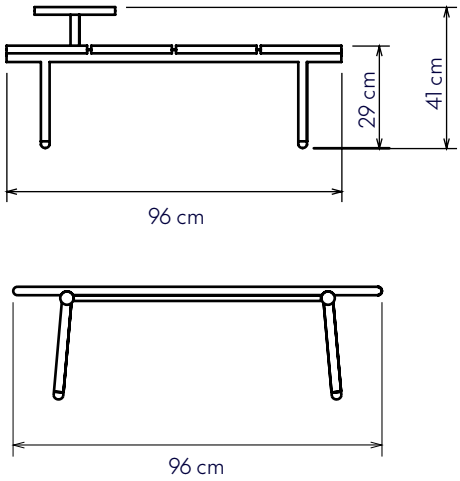

Frame
• Extruded aluminum finished with polyester powder paint.
• Polished iroko wood slats, rounded edges, and final treatment to protect the wood.
• See all the available colors in our current Bivaq Catalog or website.

Maintenance
Powder coating aluminium
• Clean the surface regularly with warm water and neutral soap. Use a non-abrasive sponge or cloth.
• Rinse with plenty of water immediately after cleaning and remove the water on the surface witha drying cloth to help you avoid water stains.

Iroko wood
Iroko wood may experience color variations or develop cracks in response to fluctuations in humidity and sudden temperature changes. As part of its natural oxidation process, the wood tends to adopt a silver-grey hue over time. To maintain the quality of Iroko furniture, we recommend treating it with a waterproof sealant twice annually.
• Begin by dampening a cloth with a solution of soap and water. Gently wipe the wood surface to remove dust and pollutants.
• Once the surface is dry, apply Cromaprotect water-based re-toner using a damp sponge. Ensure even coverage over the areas requiring treatment.

Weight and volume

Product	Kg/Lbs	m3/cft
Low table, double height	20/44	0,49/17

Other features

Available in 1 or 2 heights. The additional tray (2 height) can be requested in wood, Dekton or painted aluminum.
The product is delivered assembled.
Available waterproof cover.
Suitable for outdoor use.
Resistant to weathering and sunlight.